SEC R03 series

Refrigerated cabinet controller Instructions

Copyright ©SANHUA 2022
Subject to change without notice

※ SAFETY ATTENTION※

1. Although the internal electronic circuit of this product has been protected to some extent, the components will still be damaged if it operates in a humid environment for a long time. Therefore, please avoid installing and operating in rain, moisture and other liquids.

2. This product is installed in an electric box with DIN 35 rail.

3. This product can be used under the following environmental conditions：
   a. indoor; b. In an environment with pollution level 2; c. Altitude 2000m or below.

4. The power input must be within the range specified in the manual

5. To turn ON or OFF the power supply of this product, please use a circuit breaker or switch meeting IEC 60947-1 or IEC 60947-3 standards and install it in a position close to and convenient for customer operation.

6. Wire used for this product must meet the flammability grade Fv1 (V-1 or above), The thickness of the wire should be 0.34 mm^2 (AWG24) or above.

7. To prevent induced noise, please keep power wires away from high-voltage wires.

8. Please avoid installing the product in a position with strong magnetic field, noise, violent vibration and impact.

9. When extending the length of the sensor wire, please use the shielded wire. Do not extend it unless necessary to avoid affecting the accuracy of the sensor.

10. Sensor wires and signal wires shall be away from power and load wires and installed separately.

11. Avoid using this product near the equipment generating strong high-frequency noise (such as high-frequency welding machine, high-frequency sewing machine, high-frequency wireless telegraph, high-capacity SCR controller, etc.).

Copyright ©SANHUA 2022
Subject to change without notice

Contents

1 Product description 4
1.1 Schematic diagram of cabinet input signal 4
1.2 Basic information of controller SECR03-R0 4
2 Product configuration 5
2.1 Product list 5
2.2 Sensor information 5
2.3 Controller function connection diagram 6
2.4 Super-capacitor connection diagram 8
2.5 Remote display connection 8
2.6 InterCom cascade communication 9
2.7 Dual Temp mode setting 10
3 Operating instructions 11
3.1 Remote display 11
3.2 Parameter setting steps 12
3.3 Control mode ON/OFF and manual forced operation function 13
3.4 Parameter setting 14
3.4.1 Refrigerant and EEV setting 14
3.4.2 Sensor parameter setting【4.Pr】 15
3.4.3 Cabinet temperature parameter setting 16
3.4.4 Defrosting parameter setting 18
3.4.5 Evaporator fan control 21
3.4.6 Defog/alarm and light function【3.Pr】 22
3.4.7 Condensing temperature control mode【4.Pr】 22
3.4.8 Alarm mode【5.Pr】 22
4 Communication protocol 25
4.1 Communication protocol description 25
4.2 Read-only parameter communication address 25
4.3 Alarm parameter communication address 26
4.4 Read/write parameters communication address 26
5 Appendix: Complete parameter table 27

Copyright ©SANHUA 2022
Subject to change without notice

1 Product description

SECR03 is designed for refrigeration system management of self-contained or remote cabinets. EEV control, compressor/liquid pipeline solenoid valve control, defrosting control, evaporating fan control and other functions are integrated. PID logic will control suction superheat to ensure stable and efficient operation of the unit.

Storage: -30~55 ℃, relative humidity ≤95%RH
Operation: -30~55 ℃, relative humidity ≤95%RH
Certification: IEC61000-6-1, IEC61000-6-3
Material requirements： RoHS (hazardous substances)

1.1 Schematic diagram of cabinet input signal

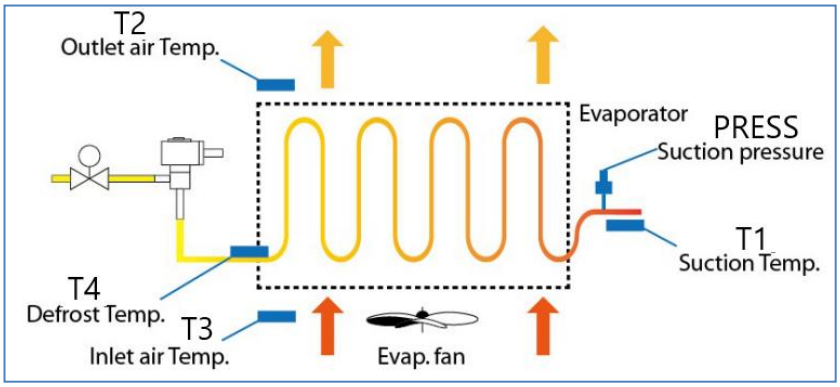

Figure 1 ： Schematic diagram of display cabinet input signal

1.2 Basic information of controller SECR03-R0

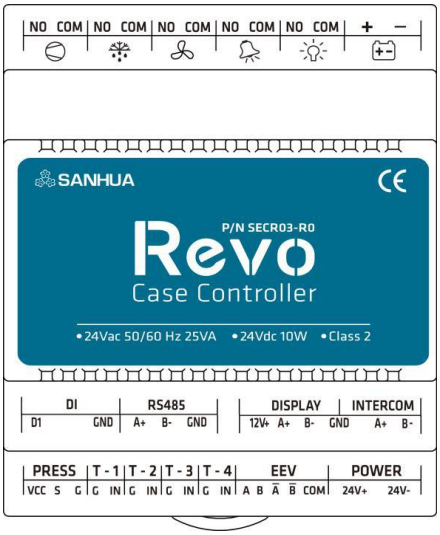

Items	Description
Dimension	80(W)mm x 106(H)mm x 54(D)mm
Power supply	24Vac +10%/-15%, 50/60Hz 24Vdc+10%/-15%, Class II
Power consumption	＞15W (24Vdc) ＞25VA (24Vac)
Connection	Pluggable terminal (M3) Torque 0.5N.m, current ≤3A(220V), Min/max wire diameter 0.34~2.5mm2 XHP terminal (EEV and sensor)
Communication	RS485，Display，InterCom

2 Product configuration

2.1 Product list

Name	Model	Details	Part number
Controller	SECR03-R0		10680001902
Remote display	MD01-R4	Display and set parameters	10680002002
Voltage pressure transmitter (Recommended) （0.5~3.5V）	YCQB02H01-1 0-20 bar	1/4” soldering 2m cable	10185001502
	YCQB02H18-1 0-20 bar	1/4” soldering 4.9m cable	10185015402
	YCQB02L12-1 0-20 bar	Thread：SAE-1/4" 7/16-20UNF-2B 2m cable	10185015502
	YCQB02L28-1 0-20 bar	Thread：SAE-1/4" 7/16-20UNF-2B 4.9m cable	10185015602
Temperature Sensor (NTC 5 KΩ）	NTC2A1	2m	10665000102
	NTC5A1	5m	10665000202
	NTC9A1	9m	10665000402
Super capacitor （Optional）	SP01		10680001702

2.2 Sensor information

Items	Description	
Temperature sensor	Sensor type	NTC 5KΩ
	Cable specification	2 or 5 or 9 m × 0.5mm²
	Protection level	IP 67
	Accuracy	±0.3°C (at 25°C)
	Operating temperature range	-55 ~ 85°C
Pressure Transmitter	Power Supply	YCQB：（5±0.25）VDC
	Output signal	YCQB：（0.5~3.5）VDC
	Pressure range accuracy	±2.0% F.S.（-30°C+85°C)
	Protection level	IP 67
	Connection	Soldering: 1/4" or Thread: 1/4"SAE 7/16-20UNF

★ Note：Above, pressure transmitters are standard models, recommended by Sanhua.
If you select other models, please refer to the Sanhua catalog. The output signal for pressure transmitters, purchased separately, must meet the following conditions： YCQB：0.5~3.5V.

2.3 Controller function connection diagram

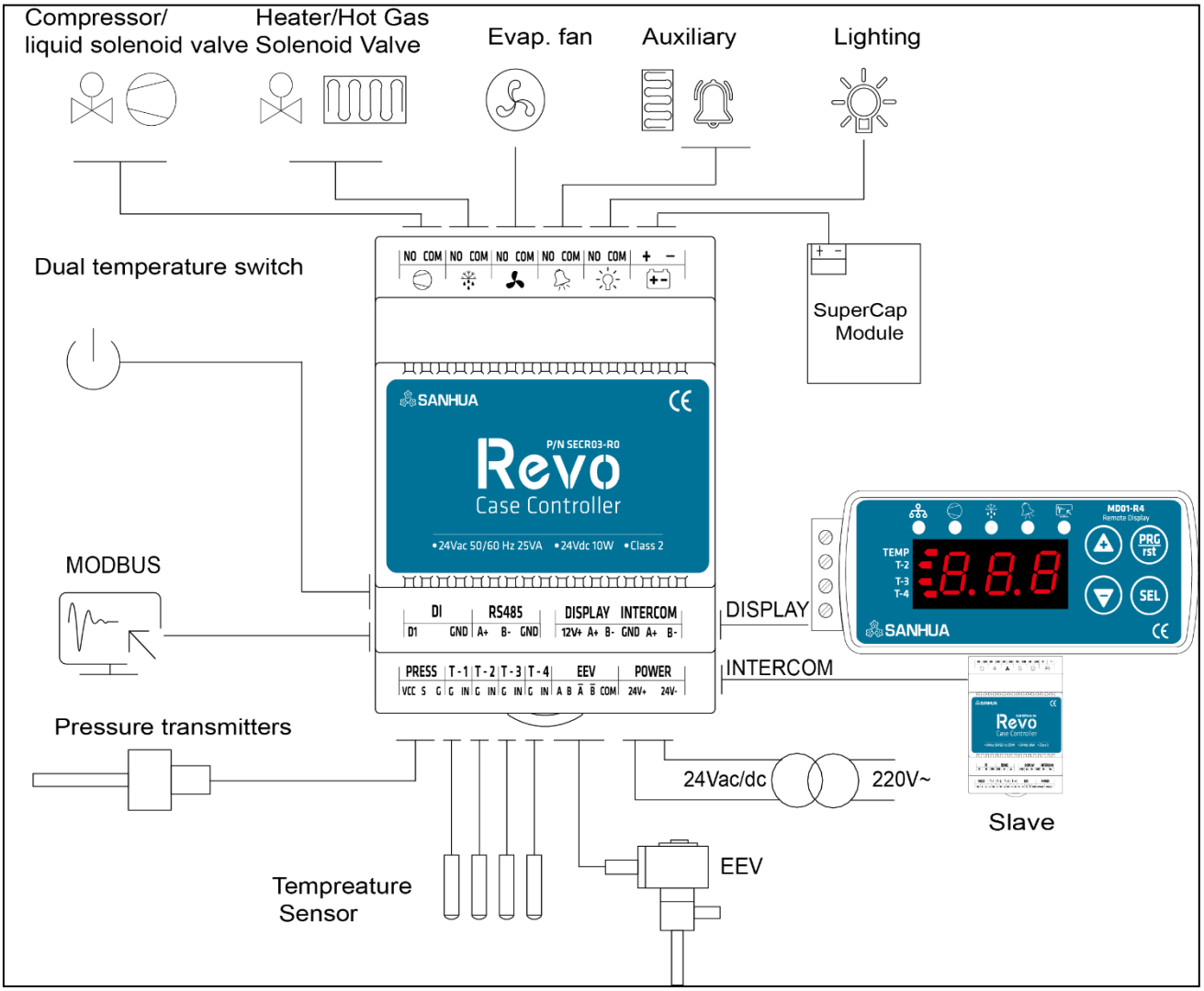

Figure 2 ： Controller function connection diagram

Screen printing	Port name	Pin	Function description	Remarks
POWER	Power supply	24V+	24VDC/AC	See 2.4 connecting power supply for details
		24V-		
	Super-capacitor	+	Super-capacitor SP01 connection	
		-		
DISPLAY	Remote indication	12V+	Differential comm. signal, Connect remote display	MD01-R4 See 2.5 connecting the remote display MD01-R4 for details
		A+		
		B-		
		GND		
RS485	RS485 communication	A+	Differential comm. signal, Connect upper computer, main control, etc	MODBUS RTU
		B-		
		GND		
INTERCOM	Cascade communication	A+	Differential comm. signal, Cascade between controllers	See 2.6 intercom cascade communication for details
		B-		
T-1	Temp sensor	G	suction Temp sensor	XHP terminal
		IN		
T-2	Temp sensor	G	Outlet air temp. sensor	XHP terminal
		IN		
T-3	Temp sensor	G	Condensation Temp sensor (default) /Inlet air Temp sensor (settable)	XHP terminal
		IN		
T-4	Temp sensor	G	Defrosting Temp sensor	XHP terminal
		IN		
PRESS	Pressure sensor	G	Wire 3：Black	XHP terminal （0.5Vdc～3.5Vdc） Voltage type
		S	Wire 2：White	
		VCC	Wire 1：Red	
EEV	EEV	A	5-pin electronic expansion valve	XHP terminal
		B		
		$\overline{A}$		
		$\overline{B}$		
		COM		
	Relay output 1	NO	Control fluid line solenoid/ compressor	220V/3A Normally open contact
		COM		
	Relay output 2	NO	Control electric heater Or hot gas bypass solenoid valve	220V/3A Normally open contact
		COM		
	Relay output 3	NO	Control evaporator fan	220V/3A Normally open contact
		COM		
	Relay output 4	NO	Alarm (default) /Electric demisting function (settable)	220V/3A Normally open contact
		COM		
	Relay output 5	NO	Control lighting	220V/3A Normally open contact
		COM		
DI	Dual temperature switch	D1	switch two groups of parameters with an external switch	See 2.7 double Temp control of one unit for details
		GND		

2.4 Super-capacitor connection diagram

In case of accidental power failure, the following two methods can be used to cut off the liquid pipeline：

1. With a liquid line solenoid valve, if power is accidentally OFF, the solenoid valve will automatically close and there's no need of super-capacitor.

2. Use low internal leakage EEV (E.g LPF), we recommend to install a super-capacitor to close the EEV when the system lose power unexpectedly.

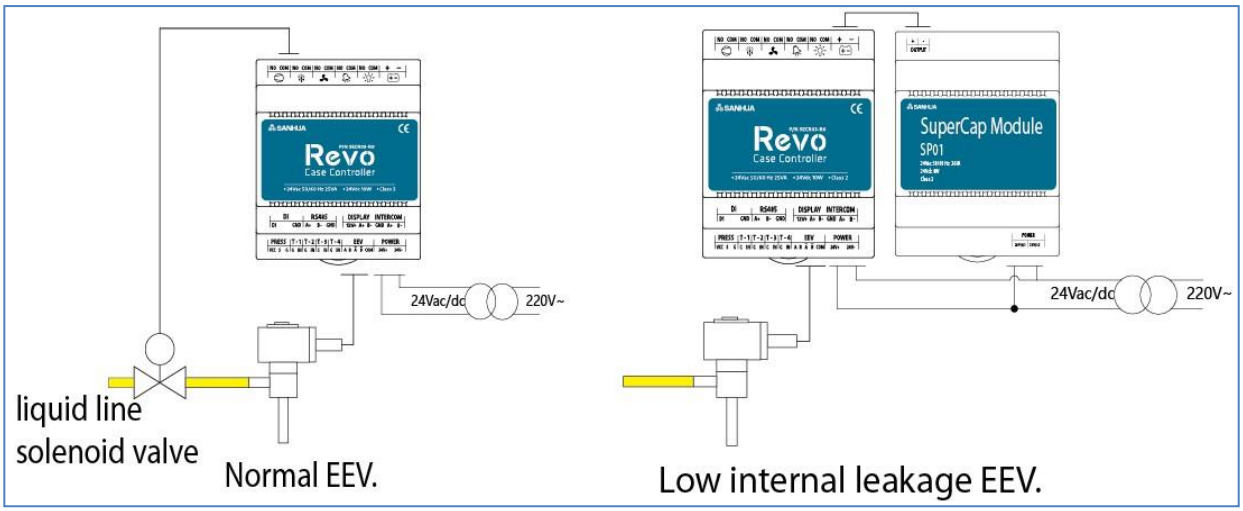

Figure 3 ： Super capacitor connection diagram

2.5 Remote display connection

For easier operation, a remote display can be connected to the blind controller, and you could operate the controller via a remote display:

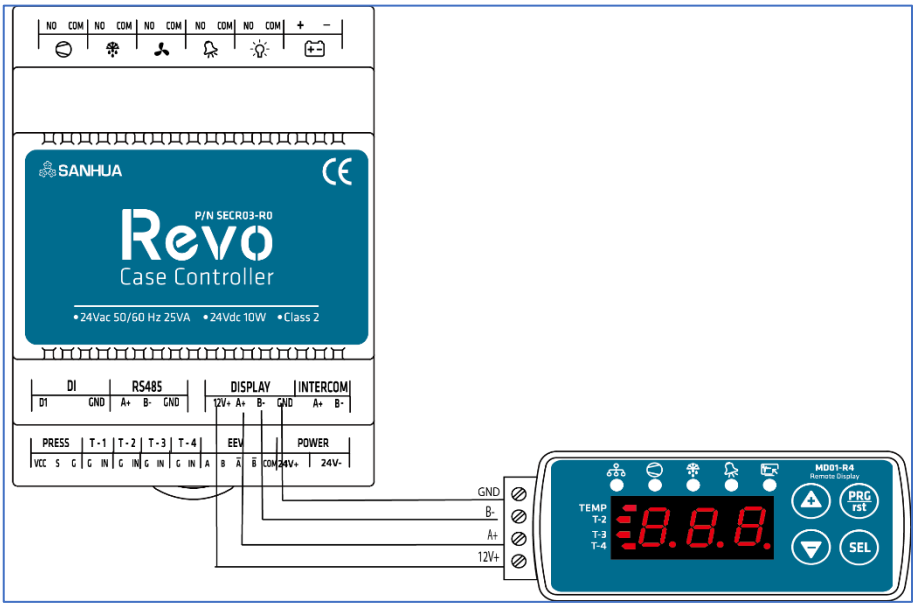

2.6 InterCom cascade communication

Connect through communication cable can realize InterCom cascade communication between controllers, when several controllers are used in parallel. The Analog signal for master controller (eg. Suction pressure , case temperature) is shared with slave controllers.

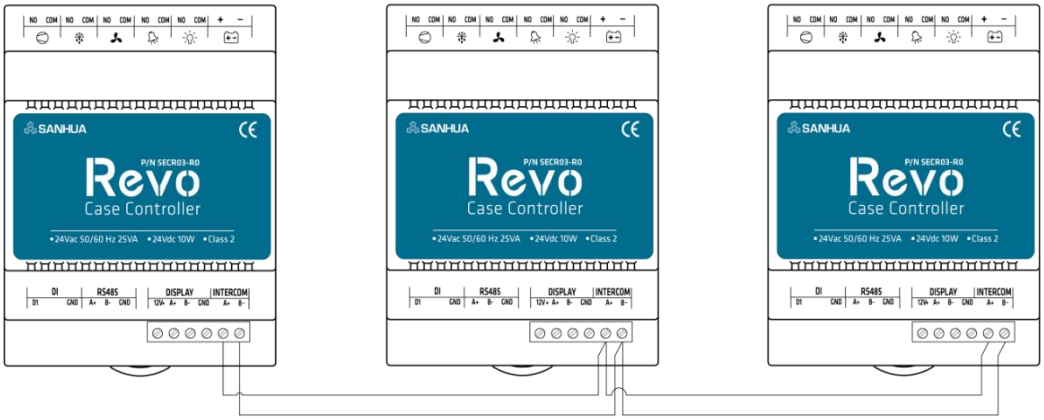

Intercom cascade communication parameter setting【3.Pr】

Add.	Description	code	unit	interval	Min.	Max.	Default
40097	★Communication ID setting	c16	/	1	1	250	2
40098	Communication speed setting	c17	48(0)=4800 96(1)=9600				1
40099	★Number of slave controllers	c18	/	1	0	9	0
40100	★Controller master/slave mode	c19	0： Slave 1： Master				0

★The controller defaults is slave mode and do not need any setting during independent working.
When multiple controllers work in parallel, if the **[c19]** is set to 1, it means that the controller is the master, and if it is set to 0, it means that the controller is the slave.

★After the cascade communication parameters are modified, please power off and restart.

★Set the master/slave controller communication ID as follows:

Master controller communication ID m*10+1， m∈[0,24]	Slave controller communication ID m*10+n， n∈[2,10]
1	2， 3， ……， 9， 10
11	12， 13， …….， 19， 20
.	.
.	.
.	.
231	232， 233， ……， 239， 240
241	242， 243， ……， 249， 250

2.7 Dual Temp mode setting

1. An external switch is connected between terminal D1 and GND for dual Temp mode (Ports between DI and GND do not need connection)
2. The switch is OFF by default, and the 1st group parameters can be used / modified. When the switch is ON, the 2nd group parameters can be used / modified.
3. The initial values of the two groups of parameters are identical and used independently, the two groups can switch via an external switch
4. Cut OFF the power before switch the parameters groups

Add	Description	Code	Bit0	Default
40167	Dual Temp mode	/	bit 0： 0: External switch OFF 1: External switch ON	0

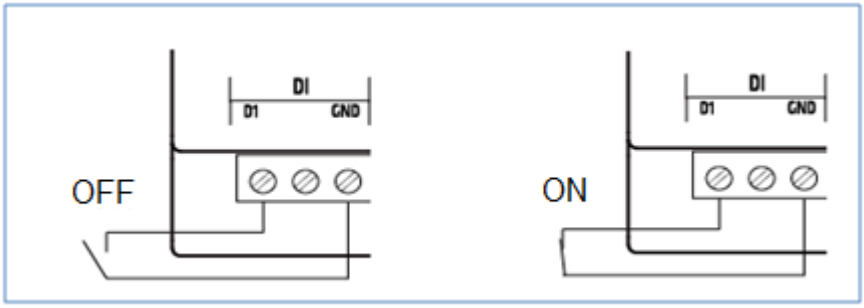

3 Operating instructions

3.1 Remote display

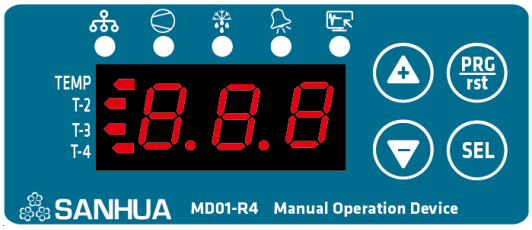

Buttons and indicators

Item		Description
Button	PRG rst	Long press to enter parameter setting mode or short press to return to the previous level
		Increase or turn up
		Decrease or turn down
	SEL	Select and save
LED		Set as a master controller, LED is ON, Set as a slave controller, LED is OFF
		When compressor or Liquid line solenoid valve work, the LED is ON
		When heater or defrost solenoid valve work, the LED is ON
		When auxiliary control connected, LED light is ON
		When communicate with upper computer/supervision, LED light is ON
	°C/bar	Units of temperature and pressure
	★TEMP	Cabinet temperature
	T-2	Outlet air temp.
	T-3	Inlet air Temp/condensing Temp
	T-4	Defrost Temp
	TEMP +T-2	Suction pressure
	T-2 +T-3	Superheat
	T-3 +T-4	EEV open degree

★Cabinet temperature is displayed by default; press the **[SEL]** key to switch the display content, view other parameters such as T-2 Temp, T-3 Temp, etc., and automatically return to the current freezer Temp display after 1 minute of no key operation.

3.2 Parameter setting steps

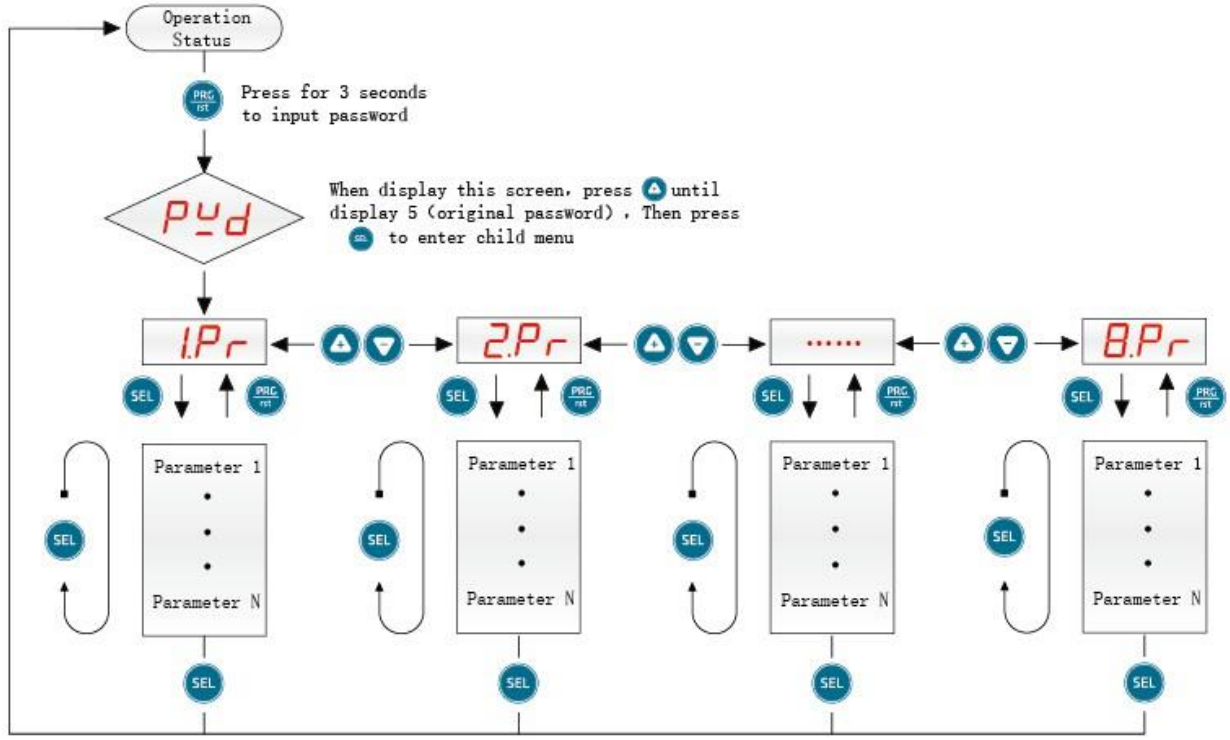

① Long press the【PRG】 key for 3 seconds, and enter the password through the 【+】 【-】button, press the 【SEL】 key to confirm, and enter the parameter setting mode (When input wrong password, users can check the parameter but cannot modify the parameter. Default password = 5, which can only be modified through RS485 communication);

② Input password to enter page Menu (1.Pr, 2.Pr, 3.Pr, 4.Pr, 5.Pr, 6.Pr, 7.Pr, 8.Pr).
Press【+】【-】 (short press ±1, long press ±10) and 【SEL】 to enter the target page.

③ Press 【SEL】 to select the parameter needed to be revised and press 【+】and【-】 to revise the value. Press 【SEL】to access to next parameter and press "PRG" to return to page menu.

④ Press【SEL】for 3 seconds to save the parameter setting and exit parameter setting mode.
Without operation after 1 minute, automatically exit the parameter setting.

Add	Description	Code	Unit	Interval	Min.	Max.	Defaults
40041	password	/	/	1	1	999	5

3.3 Control mode ON/OFF and manual forced operation function

① Press 【SEL】 for 3 seconds to start control function and digit screen displays “ON”.
Press 【SEL】 for 3 seconds to close control function and digit screen displays “OFF” and screen will be off. When under “OFF” mode, the timer will keep running while other controls of cooling, defrost and evaporating fan are OFF.

② During the defrost mode, press 【+】【-】 for 3 seconds to compulsively quit defrost mode and start the cooling mode.
During the cooling mode, press 【+】【-】 for 3 seconds to compulsively end the cooling mode and start the defrost mode.
Forced defrosting is an additional process and does not affect the defrosting settings of system; it is invalid when the control function is OFF.

③ When the system is power ON, the control function is ON.

3.4 Parameter setting

3.4.1 Refrigerant and EEV setting

Refrigerant and EEV parameter setting 【1.Pr】

Add	Description	code	unit	Interval	Min.	Max.	Defaults	Remark
40042	Refrigerant	A01	0=R22；1=R404A；2=R410A 3=R134a；4=R407C；5=R507 6=R1234ze；7=R1234yf；8=R290；9=R450A；10=R513A；11=R448A；12=R449A；13=R452A；14=R744(CO2)；15=R744A(N20)；16=R32；17=R245fa；18=R23；19=R407A；20=R407F；21=R124；22=R717；23=R407H				1	
40043	Superheat setting	A02	K	0.1	0.5	30	6.0	×10
40045	Initial opening setting	A04	%	1	0	100	70	
40046	Initial opening duration time	A05	Sec	1	0	600	20	
40047	Proportional	A06	%	0.1	0.1	99.9	30	×10
40048	Integration	A07	Sec	1	0	999	20	
40049	Differential	A08	Sec	1	0	999	4	
40050	★Forced valve opening ratio	A09	%	0.1	0	100	OFF(-1)	×10
40054	Maximum opening	A13	%	1	0	100	100	
40055	Minimum opening	A14	%	1	0	100	0	

★Note: When **[A09]** forced valve opening ratio setting value is not -1, the electronic expansion valve will be forced to open to the A09 [force valve opening ratio] setting value and remain unchanged after the initial opening duration ends.

Copyright ©SANHUA 2022
Subject to change without notice

EEV setting during solenoid valve/compressor OFF【2.Pr】

Add	Description	code	unit	Interval	Min.	Max.	Defaults	Remark
40067	EEV setting when solenoid valve/compressor OFF	b06	0: Fully closed 1: Keep the current opening degree 2: Keep to b07 setting				0	
40068	EEV opening degree when solenoid valve/compressor OFF	b07	%	1	0	100	0	

EEV setting during defrosting【2.Pr】

Add	Description	code	unit	Interval	Min.	Max.	Defaults	Remark
40076	EEV setting during defrosting	b15	0: Fully closed 1: Keep the current opening degree 2: Keep to b16 setting				0	
40077	EEV opening degree during defrosting	b16	%	1	0	100	0	

3.4.2 Sensor parameter setting【4.Pr】

Add	Description	code	unit	Interval	Min.	Max.	Defaults	Remark
40101	Pressure transmitter type	d00	0: Voltage type 1: Alternate 2: Share pressure from master				0	
40102	Transmitter input filter time	d01		1	1	100	10	
40105	Pressure transmitter offset correction	d04	bar	0.1	-9.9	9.9	0	x10
40109	T-1 Sensor offset correction	d08	℃	0.1	-9.9	9.9	0	x10
40110	T-2 Sensor offset correction	d09	℃	0.1	-9.9	9.9	0	x10
40111	T-3 Sensor offset correction	d10	℃	0.1	-9.9	9.9	0	x10
40112	T-4 Sensor offset correction	d11	℃	0.1	-9.9	9.9	0	x10

Copyright ©SANHUA 2022
Subject to change without notice

3.4.3 Cabinet temperature parameter setting

Cabinet temperature target value setting【2.Pr】

Add	Description	code	unit	Interval	Min.	Max.	Defaults	Remark
40061	★Cabinet Temp. sensor failure operation period	b00	min	1	1	20	10	
40062	★Cabinet Temp failure shutdown interval	b01	min	1	1	20	5	
40063	Power on protection time	b02	min	1	0	600	2	
40064	Adjacent Twice time start protection time	b03	min	1	1	600	2	
40065	★Cabinet Temp target value	b04	℃	0.1	-50	50	4	×10
40066	★Cabinet temperature hysteresis	b05	℃	0.1	1	100	3	×10

★When detecting open circuit or short circuit of the cabinet Temp sensor, the controller will forcibly into an intermittent refrigeration cycle mode, according to the operation time**[b00]**/ shutdown interval **[b01]**, until the sensor resume.

When controller power on, first complete **[b02]** protection time, and give the compressor relay signal to prevent frequent ON/OFF caused by power failure.

[b03] is used to prevent compressor ON/OFF too frequently due to cabinet Temp reaching the set value and return to the hysteresis during normal operation.

★When the cabinet Temp is higher than [**b04 cabinet Temp target value**] + **[b05 cabinet Temp return difference]**, the refrigeration start, and when the cabinet Temp is lower than the **[b04 cabinet Temp target value]**, refrigeration stop.

Cabinet temperature display setting【4.Pr】

Add	Description	code	unit	Interval	Min.	Max.	Defaults	Remark
40108	★Cabinet Temp sensor logic selection	d07	0: Use weighted Temp 1: Use T-2 outlet Temp 2: Share from the master controller cabinet Temp				1	
40113	Cabinet Temp weighting factor	d12	%	1	0	100	50	
40114	Cabinet Temp display upper limit	d13	℃	0.1	-40	40	25	x10
40115	Cabinet Temp display lower limit	d14	℃	0.1	-40	40	-10	x10
40116	★Cabinet Temp display during defrosting	d15	0: Stability display 1: Real Temp display				1	
40117	Cabinet Temp stabilization display coefficient	d16	/	1	1	10	1	

★Cabinet Temp weighted Temp=[T-2 outlet Temp]×[d12 cabinet Temp weighting coefficient]+[T-3 inlet air Temp]×(1-[d12 cabinet Temp weighting coefficient]);

★You can select display real temp. during defrosting, or the stabilization display can be selected. The larger the stabilization display coefficient, the slower the Temp change.

The upper and lower limits of the cabinet Temp display and the stabilization display coefficient can avoid drastic changes in the cabinet Temp due to defrosting.

Copyright ©SANHUA 2022
Subject to change without notice

Clock setting and night mode cabinet Temp setting【7.Pr】

Add	Description	code	unit	Interval	Min.	Max.	Defaults	Remark
40161	Night mode start o'clock	J00	Hour	1	0	23	22	22:30
40162	Night mode start minute	J01	Min	1	0	59	30	
40163	Night mode end o'clock	J02	Hour	1	0	23	7	7:30
40164	Night mode end minute	J03	Min	1	0	59	30	
40165	Current o'clock	J04	Hour	1	0	23	12	
40166	Current minute	J05	Min	1	0	59	30	
40171	★Night mode cabinet Temp increase	J10	℃	0.1	-19.9	19.9	2	x10

★The actual target value of cabinet Temp in night mode = **[b04 target value of cabinet Temp] + [J10 increment of cabinet Temp at night]**;
If you do not use the night mode function, you can directly set J10 [Night cabinet Temp increment] to 0.

Note: **You need to re-set the current o'clock and current minute every time when power on again. At the same time, it is recommended to calibrate the current hour and current minute every other month.**

Copyright ©SANHUA 2022
Subject to change without notice

3.4.4 Defrosting parameter setting

First of all, you need to select defrost according to schedule (default state) or according to refrigeration time in **[8.Pr]** parameter **[L16]**

Add	Description	code	unit	Interval	Min.	Max.	Defaults	Remark
40197	Defrost mode	L16	0: Defrosting according to schedule 1: Defrost according to the refrigeration operation time 2: Defrost according to the defrosting interval				0	

If select defrosting according to the schedule, the schedule can be set in **[8.Pr]**, and if select the defrosting time according to the refrigeration time, the parameters are set in **[2.Pr]**. Other control parameters involved in the defrosting process are set in **[2.Pr]**.

Defrost according to the schedule【8.Pr】

Add	Description	code	unit	Interval	Min.	Max.	Defaults	Remark
40181	1# Defrost o'clock	L00	Hour	1	-1	23	8	8：00
40182	1# Defrost minute	L01	min	1	0	59	0	
40183	2# Defrost o'clock	L02	Hour	1	-1	23	14	14：00
40184	2# Defrost minute	L03	min	1	0	59	0	
40185	3# Defrost o'clock	L04	Hour	1	-1	23	20	20：00
40186	3# Defrost minute	L05	min	1	0	59	0	
40187	4# Defrost o'clock	L06	Hour	1	-1	23	2	2：00
40188	4# Defrost minute	L07	min	1	0	59	0	
40189	5# Defrost o'clock	L08	Hour	1	-1	23	-1	
40190	5# Defrost minute	L09	min	1	0	59	0	
40191	6# Defrost o'clock	L10	Hour	1	-1	23	-1	
40192	6# Defrost minute	L11	min	1	0	59	0	
40193	7# Defrost o'clock	L12	Hour	1	-1	24	-1	
40194	7# Defrost minute	L13	min	1	0	59	0	
40195	8# Defrost o'clock	L14	Hour	1	-1	24	-1	
40196	8# Defrost minute	L15	min	1	0	59	0	

★when o'clock setting is -1, this group o'clock/minute setting is N/A

Parameter setting of defrosting according to the time of operation【2.Pr】

Add	Description	code	unit	Interval	Min.	Max.	Defaults	Remark
40070	Operation time before defrosting = Defrosting Interval	b09	Hour	0.1	0	99.9	6.0	×10

If L16 [Defrost mode] is set to 1 (defrosting according to the operation time), then b09 is the refrigeration operation time of the compressor (compressor OFF time not included).

If L16 [Defrosting Mode] is set to 2 (defrosting according to the defrosting interval), then b09 is the defrosting interval time.

Copyright ©SANHUA 2022
Subject to change without notice

Defrosting process parameter setting【2.Pr】

Add	Description	code	unit	Interval	Min.	Max.	Defaults	Remark
40069	Compressor/liquid solenoid valve during defrosting	b08	0: Turn OFF 1: Keep ON				0	
40071	★Defrost mode	b10	0: According defrosting time 1: According to defrosting temp. 2: According to time + temp.				1	
40072	Defrosting end Temp	b11	℃	1	-50	50	12	×10
40073	Defrosting time	b12	min	1	0	100	30	
40074	Drop water time	b13	min	1	0	100	5	
40075	★Pre-cooling time	b14	min	1	0	100	3	
40080	Defrost method	b19	0: Heating defrost 1: Natural Defrost				0	

★Comparison of defrost modes

a. Only the time (b10 = 0) :

If b12=set value, the defrost relay will open and stop the defrost cycle.

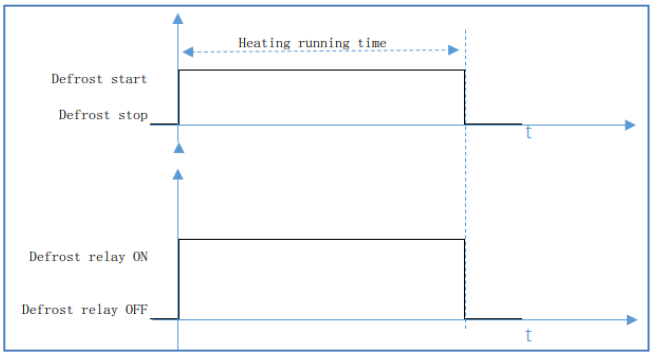

b. Only the defrosting temperature (b10 = 1):

If T4 (defrost sensor) > b11, the defrost relay will open and stop the defrost cycle.

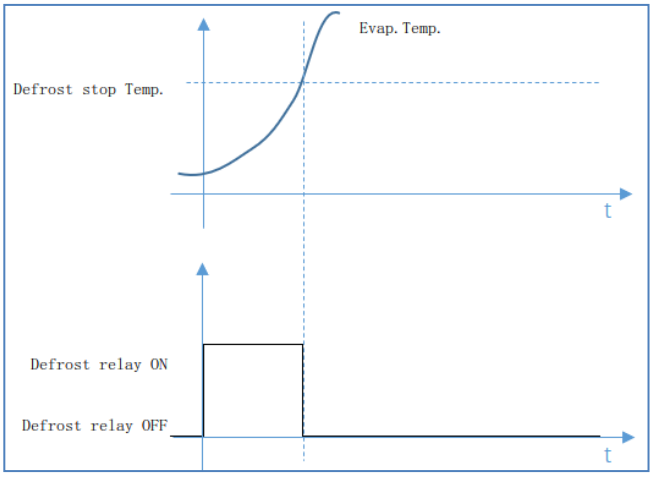

c. The time or the temperature (b10 = 2)

If T4 (defrost sensor) > b11, the defrost relay will open and stop the defrost cycle.

Or if the temperature detected by T4 is ＜ b11, but the defrosting time reaches the set value b12, the defrost relay will open and stop the defrost cycle.

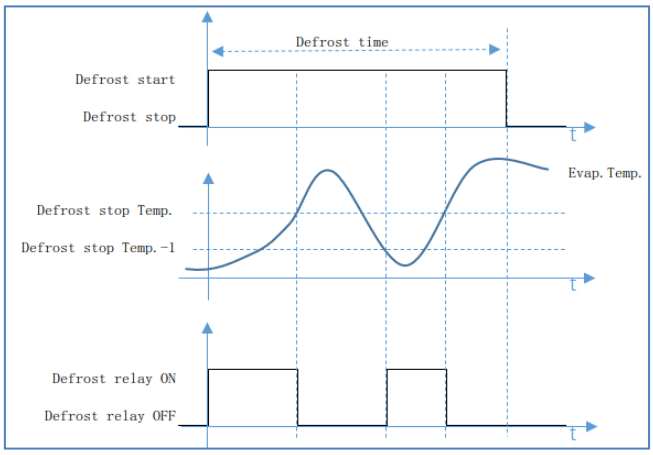

Defrost method

When **[b19]** is 0, defrost relay turn on when enter defrost cycle and defrost relay turn off when exiting.

When **[b19]** is 1, defrost relay keep off.

★b14 pre-cooling mode

When the defrosting and water drop time is over, the system enters in the cooling mode again. To prevent the fan from blowing hot air into the cabinet, pre-cooling mode can be selected; during the pre-cooling time, the evaporator fan is off.

Synchronous defrosting parameter setting【3.Pr】

Add	Description	code	unit	Interval	Min.	Max.	Defaults	Remark
40087	★Synchronous defrosting mode	c06	0: Turn OFF 1: Turn ON				0	

★In the master-slave control mode, if synchronous defrosting is turned on, when all the controllers reach the defrosting conditions, the master controller will issue a defrosting command, and all the controllers will enter the defrosting together.

All controllers enter the water dropping phase after they complete defrosting; after all the controllers finish water dropping, the master issues an instruction and all the controllers enter the refrigeration (or pre-refrigeration) phase together.

If synchronous defrosting is turned off, all controllers will perform independent defrosting according to their respective set conditions.

Copyright ©SANHUA 2022
Subject to change without notice

3.4.5 Evaporator fan control

Evaporator fan control during cooling【3.Pr】

Add	Description	code	unit	Interval	Min.	Max.	Defaults	Remark
40081	Evaporator fan mode	c00	0: Always ON 1: Synchronize with compressor/liquid line solenoid valve 2: According to the defrost Temp sensor				0	
40082	★Fan start Temp	c01	℃	0.1	-50	50	4	×10
40083	★Fan stop Temp	c02	℃	0.1	-50	50	7	×10

★Judging according to the Temp of the defrosting Temp sensor:
If the Temp of the defrosting Temp probe <c01 start Temp of the fan, the evaporating fan will be turned on;
If the Temp of the defrosting Temp probe> c02 fan stop Temp, the evaporation fan will stop.

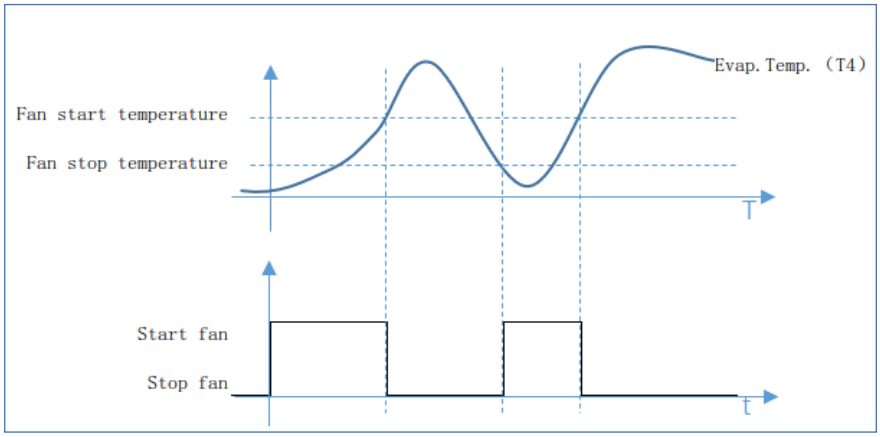

Evaporator fan control during defrosting and water dropping 【2.Pr】

Add	Description	code	unit	Interval	Min.	Max.	Defaults	Remark
40078	Fan control during defrosting	b17	0 : Always OFF 1: Same as c00 [Evaporator fan control during cooling]				1	
40079	Fan control during water dripping	b18	0: Always OFF 1: Same as c00 [Evaporator fan control during cooling] 2: Always ON				1	

3.4.6 Defog/alarm and light function【3.Pr】

Add	Description	code	unit	Interval	Min.	Max.	Defaults	Remark
40085	Defog/alarm function	c04	0: OFF 1: Defog 2: Alarm				2	
40086	Lighting function	c05	0: Turn OFF 1: Turn ON 2: According to the night mode				2	

3.4.7 Condensing temperature control mode【4.Pr】

Add	Description	code	unit	Interval	Min.	Max.	Defaults	Remark
40118	T-3 Temp sensor mode	d17	0: Inlet air Temp 1: Condensing Temp				1	

3.4.8 Alarm mode【5.Pr】

Add	Description	code	unit	Interval	Min.	Max.	Defaults	Remark
40121	MOP alarm mode	F00	0：OFF 1：ON				1	
40122	MOP alarm value	F01	bar	0.1	-1	50	9	×10
40123	MOP alarm delay	F02	Min	1	1	999	1	
40124	MOP alarm reset	F03	bar	0.1	-1	50	8	×10
40125	Low pressure alarm mode	F04	0：OFF 1：ON				1	
40126	Low pressure alarm value	F05	bar	0.1	-1	50	-0.1	×10
40127	Low pressure alarm delay	F06	Min	1	1	999	15	
40128	Low voltage alarm reset	F07	bar	0.1	-1	50	0.2	×10
40129	Low SH alarm mode	F08	0：OFF 1：ON				1	
40130	Low SH alarm value	F09	K	0.1	0.5	30	0.5	×10
40131	Low SH alarm delay	F10	Min	1	1	300	15	
40132	Low SH alarm reset	F11	K	0.1	1	30.5	3	×10
40133	High SH alarm mode	F12	0：OFF 1：ON				0	
40134	High SH alarm value	F13	K	1	10	40	30	
40135	High SH alarm delay	F14	Min	1	1	600	10	
40136	High SH alarm reset	F15	K	1	7	37	27	
40137	Opening degree when Pressure & temperature abnormal	F16	/	0.1	0	100.0	50.0	
40138	Exit time of abnormal defrost temperature	F17	Min	1	0	180	10	
40139	Operating mode when condensing temp. abnormal	F18	0：Not OFF 1：OFF				0	
40140	MOP valve closing integral time	F19	/	1	0	800	200	

When the pressure transmitter fails or the T1 suction temperature fails, EEV keep a fixed opening set by **[F16]**.

When the defrost temperature sensor fails, if the method of exiting defrost is temperature related, set the time on [**F17].**
When T3 is used as a condensing temperature sensor, if the T3 temperature probe fails, according **[F18]** to choose stop or not stop compressor.

MOP function:
When **[F00] [MOP alarm mode]** is set to 0, there is no MOP function.
When **[F00] [MOP alarm mode]** is set to 1, if **[F19] [MOP closing integral time]** is 0, it will only alarm and the valve has no protection action.
If **[F19] [MOP valve closing integral time]** > 0, the valve will be closed according to the difference between the current pressure and **[F01] [MOP alarm value]** with the speed due to **[F19] [MOP valve closing integral time].**

Alarm mode【6.Pr】

Add	Description	code	unit	Interval	Min.	Max.	Defaults	Remark
40141	Condensing Temp control mode	H00	0: OFF 1: ON + Automatic reset 2: ON + Manual Reset				0	
40142	High condensing Temp alarm	H01	℃	0.1	-40	70	45	×10
40143	High condensing Temp alarm delay	H02	Min	1	1	600	10	
40144	High condensing Temp alarm reset	H03	℃	0.1	-40	70	40	×10
40145	Condensing Temp high protection value	H04	℃	0.1	-40	70	55	×10
40146	Cold Temp high protection delay	H05	Min	1	1	600	10	
40147	High condensing Temp protection reset	H06	℃	0.1	-40	70	50	×10
40148	High cabinet Temp alarm mode	H07	0：OFF 1：ON				1	
40149	High cabinet Temp alarm value	H08	℃	0.1	-40	40	10	×10
40150	High cabinet Temp alarm delay	H09	Min	1	1	600	60	
40151	High cabinet Temp alarm reset	H10	℃	0.1	-40	40	9	×10
40152	Low cabinet Temp alarm mode	H11	0：OFF 1：ON				0	
40153	Low cabinet Temp alarm value	H12	℃	0.1	-40	40	-2	×10
40154	Low cabinet Temp alarm delay	H13	Min	1	1	600	10	
40155	Low cabinet Temp alarm reset	H14	℃	0.1	-40	40	0	×10
40156	★Cooling timeout mode	H15	0：OFF 1：ON				0	
40157	★Refrigeration overtime alarm	H16	Min	1	1	999	60	
40158	★Abnormal cabinet Temp alarm mode	H17	0：OFF 1：ON				1	
40159	★Abnormal cabinet Temp alarm value	H18	℃	0.1	-40.0	40.0	10.0	×10
40160	★Abnormal cabinet Temp determination time	H19	Min	1	1	999	10	

When **[H00] [Condensing temperature control mode]** is set to 1 or 2, and T3 is set to the condensing temperature probe.

If T3 temperature > **[H01] [high condensing temperature alarm]**, and duration time> **[H02] [high condensing temperature alarm delay]**, the high condensing temperature alarm is triggered, the alarm relay is output, and **[cht]** will be displayed in fault alarm mode.

If T3 temperature > **[H04] [high condensing temperature protection value]**, and duration time> **[H05] [cold temperature high protection delay]**, condensing temperature protection is triggered, solenoid/ compressor shutdown for protection, alarm relay output and **[CHt]** will be displayed in fault alarm mode.

★After the cooling timeout mode is ON, if the system can't reach the target value of the cabinet Temp within the set time, controller outputs an alarm.

★Alarm for abnormal cabinet temp: In the cooling state, after reaching the target cabinet temp., if the temp. return to the [abnormal cabinet Temp alarm value], and keeps the [cabinet Temp abnormality judgment time] controller outputs an alarm.

4 Communication protocol

The SECR03 controller supports RS485 communication, MODBUS communication protocol, and the host computer or the main controller supporting the MODBUS protocol based on RS485 communication can communicate with the controller.

4.1 Communication protocol description

Item	Description
Transmission line connection	Multi-line transmission
communication method	RS485 (2-wire, half-duplex)
Baud rate	Default 9600, configurable to 4800, 9600
Parity, data, stop bit	None, 8 data, 1 stop bit (cannot be modified)
Protocol type	Modbus RTU Mode
function code	Read holding register (0x03)/preset single register (0x06)
Max. number of words read	32
Cable type	Belden 9841/9842, LG LIREV-AMESB
Polling interval	1000ms
Machine ID	Communication ID40029：0xA030

4.2 Read-only parameter communication address

Add	Name	Unit	Remark
40001	T-1 Suction Temp	℃	×10
40002	T-2 Outlet Temp	℃	×10
40003	T-3 Inlet air Temp	℃	×10
40004	T-4 Defrost Temp	℃	×10
40005	Cabinet Temp	℃	×10
40006	Suction pressure	bar(g)	×10
40007	Saturation Temp	℃	×10
40008	Superheat	℃	×10
40009	EEV Opening degree	%	×10
40010	Alarm status 1		
40011	Alarm status 2		

Copyright ©SANHUA 2022
Subject to change without notice

4.3 Alarm parameter communication address

40010 Flag bit	Alarm code	Alarm content	40011 Flag bit	alarm code	Alarm content
bit 0	PO	Pressure transmitter open circuit	bit 0	MOP	High suction pressure high alarm
bit 1	PS	Pressure transmitter short circuit	bit 1	LOP	Low suction pressure high alarm
bit 2	T1O	Suction temp. sensor open circuit	bit 2	HSH	High SH alarm
bit 3	T1S	Suction temp. sensor short circuit	bit 3	LSH	Low SH alarm
bit 4	T2O	Outlet air temp. sensor open circuit	bit 4	HCT	High cabinet temp. alarm
bit 5	T2S	Outlet air temp. sensor short circuit	bit 5	LCT	Low cabinet temp. alarm
bit 6	T3O	Inlet air/condensing Temp sensor open circuit	bit 6	cht	High condensing temp. alarm
bit 7	T3S	Inlet air/condensing Temp sensor short circuit	bit 7	CHt	High condensing temp. protection
bit 8	T4O	Defrost Temp sensor open circuit	bit 8	EL	Refrigeration overtime alarm
bit 9	T4S	Defrost Temp sensor short circuit	bit 9	CTE	Abnormal cabinet Temp alarm
bit 10	IIC	Communication loss with the display board	bit 10	spare	
bit 11	SVE	System Voltage Error	bit 11	spare	
bit 12	ICE	Cascade communication interrupt	bit 12	spare	
bit 13	spare		bit 13	spare	
bit 14	spare		bit 14	spare	
bit 15	spare		bit 15	spare	

4.4 Read/write parameters communication address

See Chapter 2 and Chapter 3 for details on setting the parameter communication address.
The remark “×10” in Chapter 3 means that the value read in the communication address is the actual value×10 times.

Copyright ©SANHUA 2022
Subject to change without notice

5 Appendix: Complete parameter table

System operating parameters								
Add	**Description**	**code**	**unit**	**Interval**	**Min.**	**Max.**	**Defaults**	**Remark**
40041	Password	/	/	1	0	999	5	
40167	Dual Temp mode	/	bit 0 ： 0: OFF 1: ON				0	External switch
40059	Manual forced operation function	/	0~2： cooling mode, defrost mode polling				0	【+】【-】
40060	Control mode ON/OFF	/	0: OFF 1: ON				1	Long press SEL 3s

1.Pr Refrigerant and PID parameter setting								
Add	**Description**	**code**	**unit**	**Interval**	**Min.**	**Max.**	**Defaults**	**Remark**
40042	Refrigerant	A01	0=R22；1=R404A；2=R410A；3=R134a；4=R407C；5=R507；6=R1234ze；7=R1234yf；8=R290；9=R450A；10=R513A；11=R448A；12=R449A；13=R452A；14=R744(CO2)；15=R744(N20)；16=R32；17=R245fa；18=R23；19=R407A；20=R407F；21=R124；22=R717；23=R407H；				1	
40043	Superheat setting	A02	K	0.1	0.5	30	6	×10
40045	Initial opening setting	A04	%	1	0	100	70	
40046	Initial opening duration time	A05	Sec	1	0	600	20	
40047	Proportional	A06	%	0.1	0.1	99.9	30	×10
40048	Integration	A07	Sec	1	1	999	20	
40049	Differential	A08	Sec	1	0	999	4	
40050	Forced valve opening ratio	A09	%	0.1	0	100	OFF(-1)	×10
40054	Maximum opening	A13	%	1	0	100	100	
40055	Minimum opening	A14	%	1	0	100	0	
2.Pr Cabinet temperature and defrost parameter setting								
40061	Cabinet Temp. sensor failure operation period	b00	min	1	1	20	10	
40062	Cabinet Temp failure shutdown interval	b01	min	1	1	20	5	
40063	Power on protection time	b02	min	1	0	600	0	
40064	Adjacent Twice time start protection time	b03	min	1	1	600	2	
40065	Cabinet Temp target value	b04	℃	0.1	-50	50	4	×10
40066	Cabinet temperature hysteresis	b05	℃	0.1	1	100	3	×10
40067	EEV setting when solenoid valve/compressor OFF	b06	0: Fully closed 1: Keep the current opening degree 2: Keep to b07 setting				0	

40068	EEV opening degree when solenoid valve/compressor OFF	b07	%	1	0	100	0	
40069	Compressor/liquid solenoid valve during defrosting	b08	0: Turn OFF 1: Keep ON				0	
40070	Operation time before defrosting = Defrosting interval	b09	Hour	0.1	0	99.9	60	
40071	Defrost mode	b10	0: According to defrosting time 1: According to defrosting temp. 2: According to time + temp.				1	
40072	Defrosting end Temp	b11	℃	1	-50	50	12	×10
40073	Defrosting time	b12	min	1	0	100	30	
40074	Drop water time	b13	min	1	0	100	5	
40075	Pre-cooling time	b14	min	1	0	100	3	
40076	EEV setting during defrosting	b15	0: Fully closed 1: Keep the current opening degree 2: Keep to b16 setting				0	
40077	EEV opening degree during defrosting	b16	%	1	0	100	0	
40078	Fan control during defrosting	b17	0: Always OFF 1: Same as c00 [Evaporator fan control during cooling]				1	
40079	Fan control during water dripping	b18	0: Always OFF 1: Same as c00 [Evaporator fan control during cooling] 2: Always ON				1	
40080	Defrost method	b19	0: Heating defrost 1: Natural defrost				0	
3.Pr Evaporator fan control and communication settings								
40081	Evaporator fan mode	c00	0: Always ON 1: Synchronize with compressor/liquid line solenoid valve 2: According to the defrost Temp sensor				0	
40082	Fan start Temp	c01	℃	0.1	-50	50	4	×10
40083	Fan stop Temp	c02	℃	0.1	-50	50	7	×10
40085	Defog/alarm function	c04	0: OFF 1: Defog 2: Alarm				2	
40086	Lighting function	c05	0: Turn OFF 1: Turn ON 2: According to the night mode				2	
40087	Synchronous defrosting mode	c06	0:Turn OFF 1:Turn ON				0	
40097	Communication ID setting	c16	/	1	1	250	2	
40098	Communication speed setting	c17	48(0)=4800；96(1)=9600				1	
40099	Number of slave controllers	c18	/	1	0	9	0	
40100	Controller master/slave mode	c19	0: Slave 1:Master				0	

4.Pr Sensor settings								
40101	Pressure transmitter type	d00	0: Voltage type 1: Alternate 2: Share pressure from master				0	
40102	Transmitter input filter coefficient	d01		1	1	100	10	
40103	pressure transmitter max. value	d02	bar	1	-1	99	20	
40104	pressure transmitter min. value	d03	bar	1	-1	99	0	
40105	Pressure transmitter offset correction	d04	bar	0.1	-9.9	9.9	0	×10
40108	Cabinet Temp sensor logic selection	d07	0: Use weighted Temp 1: Use T-2 outlet Temp 2: Share from the master controller cabinet Temp				1	
40109	T-1 Sensor offset correction	d08	℃	0.1	-9.9	9.9	0	×10
40110	T-2 Sensor offset correction	d09	℃	0.1	-9.9	9.9	0	×10
40111	T-3 Sensor offset correction	d10	℃	0.1	-9.9	9.9	0	×10
40112	T-4 Sensor offset correction	d11	℃	0.1	-9.9	9.9	0	×10
40113	Cabinet Temp weighting factor	d12	%	1	0	100	50	
40114	Cabinet Temp display upper limit	d13	℃	0.1	-40	40	25	×10
40115	Cabinet Temp display lower limit	d14	℃	0.1	-40	40	-10	×10
40116	Cabinet Temp display during defrosting	d15	0: Stability display 1: Real Temp display				1	
40117	Cabinet Temp stabilization display coefficient	d16	/	1	1	10	1	
40118	T-3 Temp sensor mode	d17	0: Inlet air Temp 1: Condensing Temp				1	
5.Pr Alarm setting								
40121	MOP Alarm mode	F00	0: OFF 1: ON				1	
40122	MOP Alarm value	F01	bar	0.1	-1	bar	0.1	-1
40123	MOP Alarm delay	F02	Min	1	1	Min	1	1
40124	MOP alarm reset	F03	bar	0.1	-1	bar	0.1	-1
40125	Low pressure alarm mode	F04	0: OFF 1: ON				1	
40126	Low pressure alarm value	F05	bar	0.1	-1	50	-0.1	×10
40127	Low pressure alarm delay	F06	Min	1	1	999	15	
40128	Low voltage alarm reset	F07	bar	0.1	-1	50	0.2	×10
40129	Low SH alarm mode	F08	0: OFF 1: ON				1	
40130	Low SH alarm value	F09	K	0.1	0.5	30	0.5	×10
40131	Low SH alarm delay	F10	Min	1	1	300	15	
40132	Low SH alarm reset	F11	K	0.1	1	30.5	3	×10
40133	High SH alarm mode	F12	0: OFF 1: ON				0	
40134	High SH alarm value	F13	K	1	10	40	30	
40135	High SH alarm delay	F14	Min	1	1	600	10	
40136	High SH alarm reset	F15	K	1	7	37	27	

Copyright ©SANHUA 2022
Subject to change without notice

40137	opening degree when Pressure and temperature abnormal	F16	/	0.1	0	100	50	×10
40138	Exit time of abnormal defrost temperature	F17	Min	1	0	180	10	
40139	Operating mode when condensing temperature Abnormal	F18	0：Do not OFF 1：OFF				0	
40140	MOP valve closing integral time	F19	/	1	0	800	200	
6.Pr Alarm setting								
40141	Condensing Temp control mode	H00	0: OFF 1: ON+ Automatic reset 2: ON+ Manual reset				0	
40142	High condensing Temp alarm	H01	℃	0.1	-40	70	45	×10
40143	High condensing Temp alarm delay	H02	Min	1	1	600	10	
40144	High condensing Temp alarm reset	H03	℃	0.1	-40	70	40	×10
40145	Condensing Temp high protection value	H04	℃	0.1	-40	70	55	×10
40146	Cold Temp high protection delay	H05	Min	1	1	600	10	
40147	High condensing Temp protection reset	H06	℃	0.1	-40	70	50	×10
40148	High cabinet Temp alarm mode	H07	0: OFF 1: ON				1	
40149	High cabinet Temp alarm value	H08	℃	0.1	-40	40	10	×10
40150	High cabinet Temp alarm delay	H09	Min	1	1	600	60	
40151	High cabinet Temp alarm reset	H10	℃	0.1	-40	40	9	×10
40152	Low cabinet Temp alarm mode	H11	0: OFF 1: ON				0	
40153	Low cabinet Temp alarm value	H12	℃	0.1	-40	40	-2	×10
40154	Low cabinet Temp alarm delay	H13	Min	1	1	600	10	
40155	Low cabinet Temp alarm reset	H14	℃	0.1	-40	40	0	×10
40156	Cooling timeout mode	H15	0: OFF 1: ON				0	
40157	Refrigeration overtime alarm	H16	Min	1	1	999	60	
40158	Abnormal cabinet Temp alarm mode	H17	0: OFF 1: ON+ Automatic reset 2: ON+ Manual reset				1	
40159	Abnormal cabinet Temp alarm value	H18	℃	0.1	-40	40	10	×10
40160	Abnormal cabinet Temp determination time	H19	Min	1	1	999	10	

Copyright ©SANHUA 2022
Subject to change without notice

7.Pr Clock and night mode settings								
40161	Night mode start o'clock	J00	Hour	1	0	23	22	
40162	Night mode start minute	J01	Min	1	0	59	30	
40163	Night mode end o'clock	J02	Hour	1	0	23	7	
40164	Night mode end minute	J03	Min	1	0	59	30	
40165	Current o'clock	J04	Hour	1	0	23	12	
40166	Current minute	J05	Min	1	0	59	30	
40171	Night mode cabinet Temp. increase	J10	℃	0.1	-19.9	19.9	2	×10
8.Pr Defrost according to the schedule								
40181	1# Defrost o'clock	L00	Hour	1	-1	23	8	
40182	1# Defrost minute	L01	min	1	0	59	0	
40183	2# Defrost o'clock	L02	Hour	1	-1	23	14	
40184	2# Defrost minute	L03	min	1	0	59	0	
40185	3# Defrost o'clock	L04	Hour	1	-1	23	20	
40186	3# Defrost minute	L05	min	1	0	59	0	
40187	4# Defrost o'clock	L06	Hour	1	-1	23	2	
40188	4# Defrost minute	L07	min	1	0	59	0	
40189	5# Defrost o'clock	L08	Hour	1	-1	23	-1	
40190	5# Defrost minute	L09	min	1	0	59	0	
40191	6# Defrost o'clock	L10	Hour	1	-1	23	-1	
40192	6# Defrost minute	L11	min	1	0	59	0	
40193	7# Defrost o'clock	L12	Hour	1	-1	24	-1	
40194	7# Defrost minute	L13	min	1	0	59	0	
40195	8# Defrost o'clock	L14	Hour	1	-1	24	-1	
40196	8# Defrost minute	L15	min	1	0	59	0	
40197	Defrost mode	L16	0: Defrosting according to schedule 1: Defrost according to the refrigeration operation time 2: Defrost according to the defrosting interval				0	

Copyright ©SANHUA 2022
Subject to change without notice